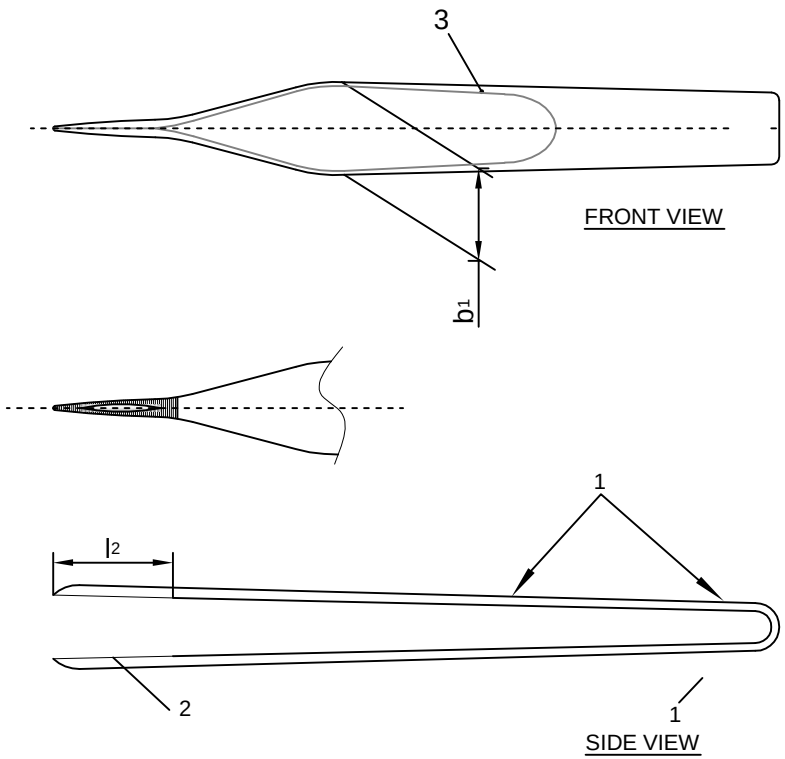

Y.B.SURGICO

Manufactures & Exporters

Qamar Market Street, Green Town, Near Sublime Chowk, Sialkot. PAKISTAN

Tel: +92 52 3551358 , 3557709
Fax: 92 52 3557705
www.ybsurgico.com.pk

DEVICE	Splinter Forceps Feilchenfeld		
REF.NO.	Y06.376.11		
Material	Stainless Steel AISI 410		
Size	11.5cm		
Charge		Page	1
Date	20.08.2024	Approved by	Director QC

Ref	l_1 ±5.00	l_2 ±2.00	b_1 ±1.00
Y06.376. 11	115.00	15.00	13.75